Student Name:

Applied & Computational Mathematics

Latest Revision: July 31, 2013

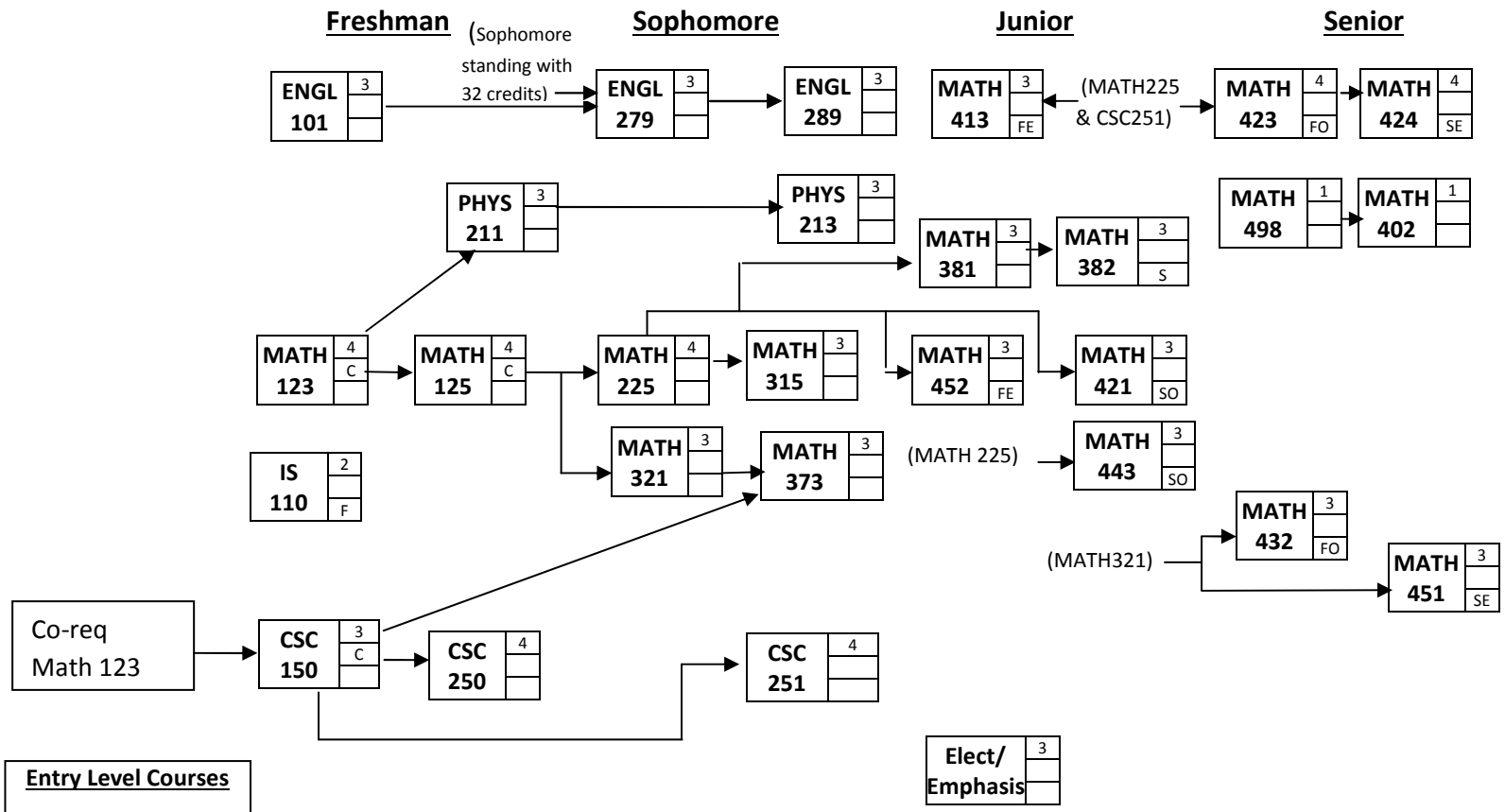

Entry Level Courses

Math: _____

Placement Exam:
Trig: _____
Algebra:_____

Legend

Prerequisite → Course ### ← Credit Hours, Grade Required, When Offered

Completed or Concurrent

F = Fall Semester
S = Spring Semester
O = Odd Number Years
E = Even Number Years
(blank) = Every Semester

Humanities and Social Science

(15 Credits Total are Required)

including: a) 6 Credits Humanities
b) 6 Credits Social Science

Humanities	Social Science
1. _____ ___	1. _____ ___
2. _____ ___	2. _____ ___
3. _____ ___	3. _____ ___
4. _____ ___	4. _____ ___

General Education requirements are not fully represented.

Math Emphasis Areas

3 courses are required from any one of the following areas, subject to any restrictions given

-Actuarial Science:
MATH 353, ECON 201, ECON 202, IENG 302, IENG 362, IENG 415

-Atmospheric Science:
ATM 301, ATM 401, ATM 406, ATM 450, ATM 460

-Biology: BIOL 151/151L, BIOL 311, BIOL 341, BIOL 371, BIOL 403

-Computer Science:
REQ: CSC 300
EMPH: CSC 372 CSC 410, CSC 412, CSC 433, CSC 445, CSC 449, CSC 464

-Chemistry: REQ: CHEM 114
EMPH: CHEM 252, CHEM 342, CHEM 344

-Electrical Engineering:
EE 220/220L, EE 221/221L, EE320/320L, EE 362, EE 381

-Geographical Info Systems:
GEOL 416, GEOL 417, GEOL 419/519 GEOL 420

-Industrial Engineering:
MATH 353, IENG 362, IENG 415, IENG 425, IENG 441, IENG 486

-Physics: PHYS 341, PHYS 451, PHYS 471, PHYS 481

-Statistics: IENG 362, IENG 441, IENG 415, MATH 447, MATH 486

-Structural Design:
EM 214, EM 215, EM 321

See SDSM&T Catalog or Math Computer Science Office for more information on each class or emphasis area.

Department of Mathematics and Computer Science Checklist of Requirements
For Students Declaring Their Major Fall 2013 or Later. 5/16/2013

B.S in Applied & Computational Mathematics

Mathematics Courses

Class	Hrs
MATH 123 Calculus 1	4_____
MATH 125 Calculus 2	4_____
MATH 225 Calculus 3	4_____
MATH 321 Differential Equations	3_____
MATH 315 Linear Algebra	3_____
MATH 381 Intro to Prob & Stats	3_____
MATH 382 Intro to Prob & Stats 2	3_____
MATH 413 Abstract Algebra	3_____
MATH 421 Complex Analysis	3_____
MATH 423 Advanced Calculus I	4_____
MATH 424 Advanced Calculus II	4_____
MATH 432 Partial Differential Eqns	3_____
MATH 451 Mathematical Modeling	3_____
MATH 452 Adv. Studies in Math	3_____
MATH 498 Undergrad Research	1_____
MATH 402 Communications in Math	1_____
Emphasis Area *	9_____
Total	58 credits

* Math majors must complete three (3) courses in a science or engineering "emphasis" area. Any double major automatically satisfies this emphasis area requirement with their other major. Further information about possible emphasis areas can be found on the math flowchart.

Computational Courses

Class	Hrs
CSC 150 Computer Science 1	3_____
CSC 250 Computer Science 2	4_____
CSC 251 Finite Structures	4_____
MATH 373 Intro to Numerical Analysis	3_____
MATH 443 Data Analysis	3_____
Total	17 credits

Science Courses

Class	Hrs
PHYS 211 University Physics I	3_____
PHYS 213 University Physics II	3_____
Science Requirement **	3_____
Science Lab **	1_____
Total	10 credits

** The science requirement for this major consists of PHYS 211, PHYS 213, one course from among BIOL 151, CHEM 112, GEOL 201, plus a lab associated with one of the science courses taken – either BIOL 151L, CHEM 112L, GEOL 201L, or PHYS 213L.

Arts/Humanities & Social Sciences**

(*General Education requirement is 12 credits*)

IS 110 Explorations	2_____
ENGL 101 Composition I	3_____
ENGL 279 Tech Comm I	3_____
ENGL 289 Tech Comm II	3_____
Social Sciences	3_____
Social Sciences	3_____
Arts / Hum	3_____
Arts / Hum	3_____
PE + +	1_____
PE + +	1_____
Upper level Hum/SS course	3 _____
Free elective ***	7 _____
Total	35 credits

+ +MUEN 101, 121, 122 can be used to substitute for one or two of the required two Physical Education credits

**All majors must complete at minimum of 15 credits in the area of Humanities & Social Sciences with at least 3 credits at or above the 300 level.

*** All majors must complete a minimum of 120 total credits. Please note that MATH 021, MATH 101, MATH 102, MATH 120, CSC 105 PHYS 111, PHYS 113, CHEM 106, and CHEM 108 will not count toward the major.